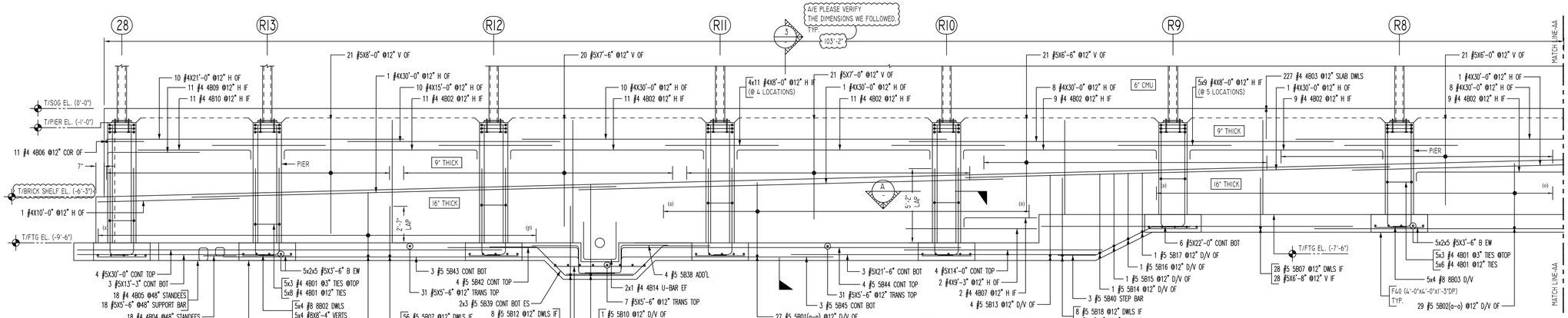

A/E PLEASE PROVIDE THE LAP SCHEDULE WE FOLLOWED. TYP.

LAP SCHEDULE FOR FOOTINGS & FOUNDATION WALLS

SIZE	4000 PSI	
	TOP	OTHERS
#3	24"	19"
#4	32"	25"
#5	40"	31"
#6	48"	37"
#7	70"	54"
#8	80"	62"
#9	91"	70"
#10	102"	79"
#11	113"	87"

FOOTING SCHEDULE 2.5 TON/SF

TYPE	FOOTING SIZE		BOTTOM REINFORCING (3" CLR FROM BOTTOM)
	LENGTH x WIDTH	DEPTH	
F30	3'-0"x3'-0"	1'-3"	(5)- #4 EACH WAY
F40	4'-0"x4'-0"	1'-3"	(5)- #5 EACH WAY
F50	5'-0"x5'-0"	1'-3"	(6)- #5 EACH WAY
F70	7'-0"x7'-0"	1'-9"	(8)- #6 EACH WAY
F80	8'-0"x8'-0"	1'-9"	(10)- #6 EACH WAY

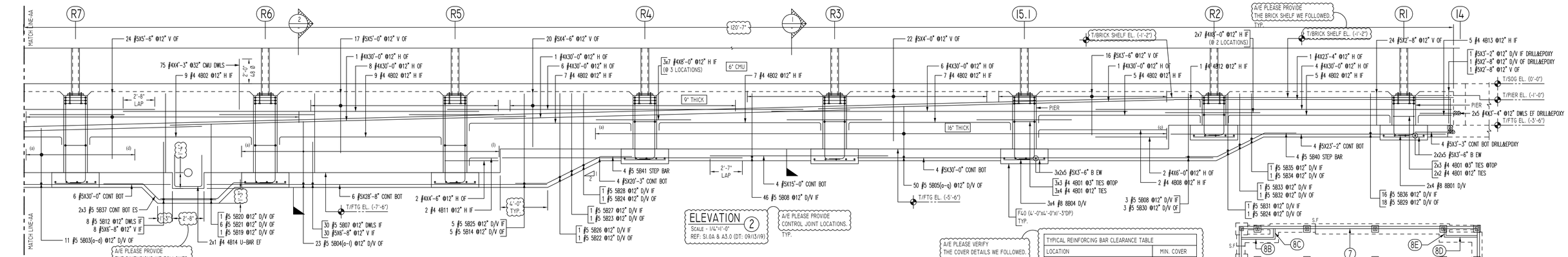

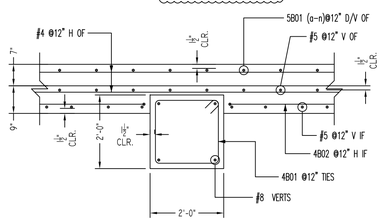

A SECTION
SCALE - 1/2"=1'-0"
REF:P/S2.0 (DT: 09/13/19)

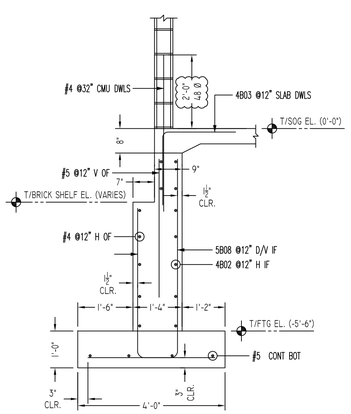

1 SECTION
SCALE - 1/2"=1'-0"
REF:I/S3.0 (DT: 09/13/19)

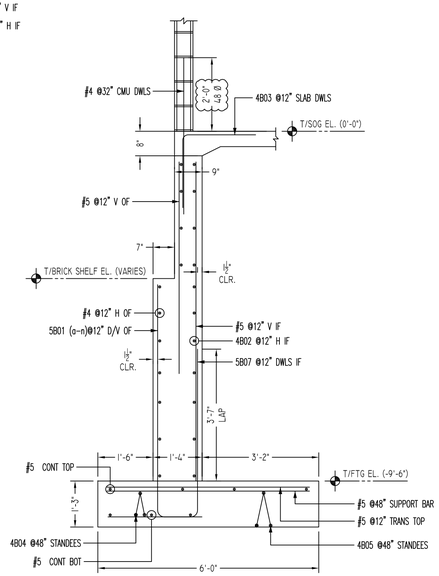

3 SECTION
SCALE - 1/2"=1'-0"
REF:J/S3.0 (DT: 09/13/19)

Release Code: R2						BENDING DETAILS.															
Bar Mark	Qty	Size	Total length	Type	'A'	'B'	'C'	'D'	'E'	'F'	'G'	'H'	'J'	'K'	'L'	'M'	'N'	'O'	'P'
4B01	139	#4	779'11		4 1/2"	19"	19"	19"	19"			4 1/2"	3"						
4B02	109	#4	15'9"12		8"	18'8"						8"							
4B03	227	#4	4'8"11			28"	28"												
5B04	18	#4	47'3"25			19"	13 1/2"	8"	13 1/2"	19"			3 1/2"			3 1/2"			
5B05	18	#4	57'3"25			19"	11 1/2"	8"	11 1/2"	19"			11"			5"			
4B06	11	#4	5'4"13			28"	28"												
4B07	2	#4	5'10"12		8"	57"													
4B08	2	#4	11'6"12		8"	10'10"													
4B09	11	#4	7'7"12		8"	6'6"													
4B10	11	#4	8'8"12		8"	8'8"													
4B11	2	#4	3'7"12		8"	25"													
4B12	9	#4	2'9"12		8"	22"													
4B13	5	#4	3'6"12		8"	2'10"													
4B14	4	#4	7'8"13			28"	2'4"	28"											
5B01a	2	#5	5'11"12		10"	5'1"													
VARIES																			
5B01b	9	#5	6'7"12		10"	5'9"													
5B02a	2	#5	70'8"11			31'8"	31'8"												
VARIES																			
5B02b	9	#5	79'8"11			31'8"	4'8"												
5B03a	3	#5	7'10"11			31'8"	4'8"8"												
VARIES																			
5B03d	2	#5	8'8"11			31'8"	4'10"8"												
5B04a	2	#5	8'3"11			31'8"	5'2"												
VARIES																			
5B04b	2	#5	8'9"11			31'8"	5'8"												
5B04c	9	#5	8'10"11			31'8"	5'8"8"												
5B05a	3	#5	5'9"11			21'8"	3'8"												
VARIES																			
5B05g	2	#5	7'8"11			21'8"	4'10"8"												
5B06a	2	#5	4'1"12		10"	4'1"													
VARIES																			
5B06g	2	#5	5'8"12		10"	4'10"													
5B07	114	#5	6'3"11			25"8"	3'8"												
5B08	49	#5	7'10"11			25"8"	5'5"												
5B09	9	#5	6'7"12		10"	5'4"													
5B10	9	#5	6'8"12		10"	5'7"													
5B11	6	#5	7'1"12		10"	6'3"													
5B12	16	#5	7'5"11			25"8"	5'8"												
5B13	4	#5	9'10"11			41"8"	5'9"												
5B14	6	#5	8'9"11			31"8"	5'8"												
5B15	9	#5	8'3"11			31"8"	5'2"												
5B16	9	#5	7'10"11			31"8"	4'9"												
5B17	9	#5	7'4"11			31"8"	4'2"												
5B18	9	#5	8'1"11			31"8"	5'1"												
5B19	9	#5	8'6"11			31"8"	5'5"												
5B20	9	#5	8'4"11			31"8"	5'3"												
5B21	6	#5	9'5"11			31"8"	6'4"												
5B22	9	#5	7'4"11			21"8"	5'3"												
5B23	9	#5	6'11"11			21"8"	4'10"												
5B24	2	#5	6'5"11			21"8"	4'4"												
5B25	5	#5	10'1"11			25"8"	7'8"												
5B26	9	#5	9'6"11			25"8"	7'1"												
5B27	9	#5	9'0"11			25"8"	6'7"												
5B28	9	#5	8'6"11			25"8"	6'1"												
5B29	16	#5	5'4"11			25"8"	2'10"												
5B30	3	#5	7'0"11			21"8"	4'10"												
5B31	9	#5	7'3"11			25"8"	4'10"												
5B32	9	#5	5'7"11			21"8"	3'10"												
5B33	9	#5	6'9"11			25"8"	4'4"												
5B34	9	#5	5'5"11			21"8"	3'4"												
5B35	9	#5	6'3"11			25"8"	3'10"												
5B36	16	#5	5'10"11			25"8"	3'5"												
5B37	6	#5	10'7"11			3'4"	7'11"	4'10"					74"8"			73"8"	95"8"		
5B38	4	#5	7'11"28			3'4"	2'10"	2'7"											
5B39	6	#5	11'0"11			3'4"	2'10"8"	4'10"					2'7"			2'10"	10'7"		
5B44	7	#5	9'10"11			2'8"	4'6"	2'8"					2'8"8"			4'8"	9'6"		
5B45	4	#5	10'4"11			2'8"	5'8"8"	2'8"					2'3"8"			4'6"	9'10"		
5B42	4	#5	10'1"12		10"	9'3"													
5B43	3	#5	26'1"12		10"	25'2"													
5B44	4	#5	24'10"12		10"	24'0"													
5B45	3	#5	15'10"12		10"	15'0"													
4B01	8	#8	44'5"12		1'4"	37'8"													
4B02	28	#8	7'6"12		1'4"	6'2"													
4B03	26	#8	8'8"12		1'4"	7'2"8"													
4B04	12	#8	6'6"12		1'4"	5'2"8"													

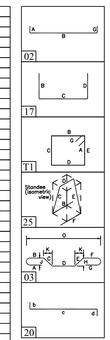

ALL BARS IN THIS DRAWING
ASTM A615 GRADE 60
BLACK UNCOATED

A/E PLEASE VERIFY THE COVER DETAILS WE FOLLOWED. TYP.

TYPICAL REINFORCING BAR CLEARANCE TABLE	
LOCATION	MIN. COVER
FOOTINGS AGAINST EARTH BOTTOM TOP	 3" CLR 2" CLR
COLUMNS AND PIERS (VERT. REINF.)	2" CLR
COLUMNS AND PIERS (TIES. REINF.)	1 1/2" CLR
WALLS INTERIOR FACE (#5 & SMALLER)	1 1/2" CLR
WALLS INTERIOR FACE (#6 & LARGER)	2" CLR
WALLS EXTERIOR FACE (#5 & SMALLER)	1 1/2" CLR
WALLS EXTERIOR FACE (#6 & LARGER)	2" CLR

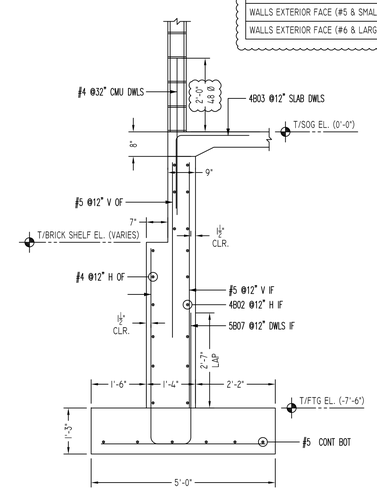

2 SECTION
SCALE - 1/2"=1'-0"
REF:2/S3.0 (DT: 09/13/19)

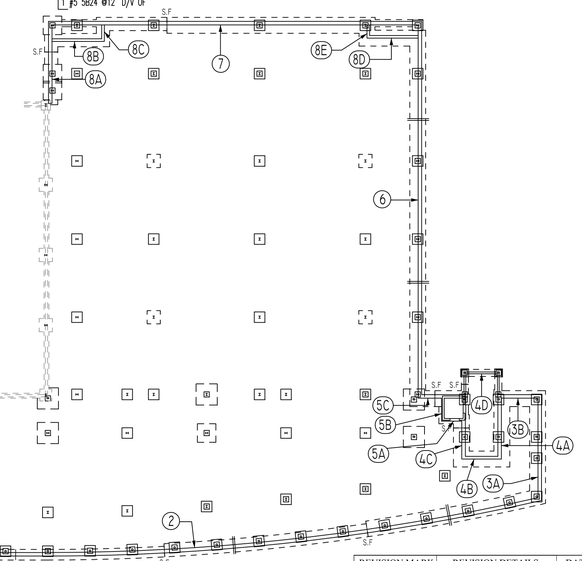

KEY PLAN
REF:S-1.0A & S1.0B (DT: 09/13/19)
SCALE - N.T.S

REVISION MARK	REVISION DETAILS	DATE
0	FOR APPROVAL	10/14/2019

Abbreviations:

I.F.=Inside Face	OPNG=Opening
O.F.=Outside Face	BAL: Balance
E.F.=Each Face	BTW:Between
DWL=Dowel	CJ=Construction Joint
V=Vertical	CLR: CLEARANCE
H=Horizontal	CMU= Concrete Masonry Unit
C.B.=Corner Bar	CONT.=Continuous
S.DWL.=Slab Dowel	EA.=Each
E.W.=Each Way	Elev.=Elevation
B/BOT.=Bottom	EMB=Embedment
T/=Top	SW = Short Way
MDWL= Masonry Dowel	LW=Long Way
B.B.=Bond Beam	(BL)=Black Bar
ALT: Alternate	(EP)=Epoxy Bar
Approx: Approximate	(GA)= Galvanized

NOTICE

Shortages, improper fabrication or claims for any other reason must be reported to this company within a periodof 15 days of delivery. This company reserves the right to field inspect prior to replacement or reconditioning of nonconforming material, and will not honor charges for work done in the field without specific authorization from this company.

REINFORCING STEEL PLACING DRAWINGS ONLY USE IN CONJUNCTION WITH CONTRACT DRAWINGS & SPECIFICATIONS. ELEVATIONS & DIMENSIONS SHOWN ON THIS DRAWING ARE FOR DETAILING PURPOSES ONLY AND SHOULD NOT BE USED FOR CONSTRUCTION UNLESS VERIFIED BY ENGINEER OR CONTRACTOR.

PROJECT	WAREHOUSE & OFFICE EXPANSION		
LOCATION	340 BAMES ROAD, WALLINGFORD, CT		
ARCHITECT	ROBERT DAY ARCHITECTS		
ENGINEER	MICHALEL HORTON ASSOC., INC.		
CUSTOMER	COMPLEX CONSTRUCTION		
DRAWN BY: MRS	DATE: 10/14/19	REVIEWED BY: T/L	JOB NO. 19131
DRAWING TITLE: ELEVATION & DETAILS			DRAWING NO.: R2